Phono® Solar

PREMIUM PLUS MODULE SERIES

HIGH EFFICIENCY MONO-PERC M-5B-R

300-320W

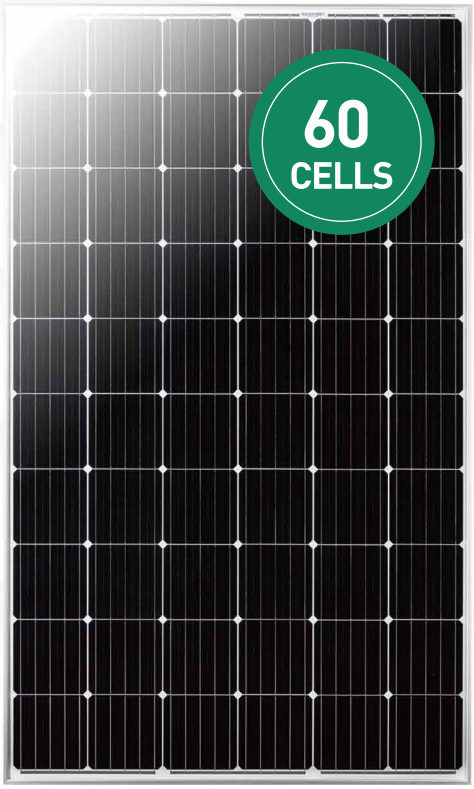

HIGHER POWER OUTPUT

- Outstanding performance under weak-light conditions
- Superior temperature coefficient guarantees power generation efficiency

HIGHER QUALITY RELIABILITY AND DURABILITY

- 5400Pa maximum snow load, 2400Pa maximum wind load
- Guaranteed 0~+5W positive tolerance secures reliable power output
- Strict internal quality assurance plan and extended testing standards ensures enhanced durability

PID RESISTANT

- Improved cell processing technology and IEC-certified electrical design guarantee solid PID resistance

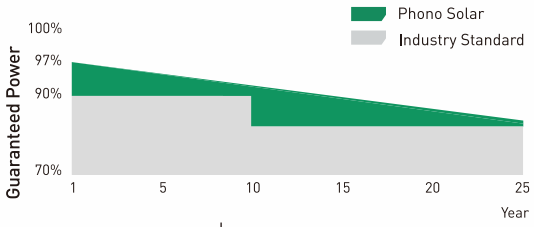

12-year Product Warranty | **25-year** Linear Performance Warranty

MANAGEMENT SYSTEM CERTIFICATES

IEC 61215, IEC 61730
ISO 9001:2015 / Quality management system
ISO 14001:2015 / Standards for environmental management system
OHSAS 18001:2007 / International standards for occupational health & safety
IEC TS 62941: 2016 Terrestrial photovoltaic (PV) modules-guidelines for increased confidence in PV module design qualification and type approval

Bloomberg NEW ENERGY FINANCE Tier1

2019 TOP PERFORMER
PVEL | DNV·GL
PV MODULE RELIABILITY SCORECARD

GL-EN-Version 2020.04.13 © Phono Solar Co., Ltd All Rights Reserved

www.phonosolar.com info@phonosolar.com

ELECTRICAL TYPICAL VALUES

Model	PS300M-20/U PS300MH-20/U		PS305M-20/U PS305MH-20/U		PS310M-20/U PS310MH-20/U		PS315M-20/U PS315MH-20/U		PS320M-20/U PS320MH-20/U	
Testing Condition	STC	NOCT	STC	NOCT	STC	NOCT	STC	NOCT	STC	NOCT
Rated Power (Pmpp)	300	221	305	225	310	229	315	233	320	236
Rated Current (Impp)	9.31	7.52	9.36	7.56	9.41	7.60	9.46	7.64	9.51	7.68
Rated Voltage (Vmpp)	32.23	29.43	32.59	29.76	32.95	30.09	33.30	30.41	33.65	30.73
Short Circuit Current (Isc)	9.75	7.88	9.83	7.94	9.91	8.01	9.99	8.07	10.07	8.14
Open Circuit Voltage (Voc)	39.45	36.37	39.95	36.83	40.31	37.17	40.66	37.49	41.01	37.81
Module Efficency (%)	18.44		18.75		19.05		19.36		19.67	

STC(Standard Testing Conditions):Irradiance 1000W/m², AM 1.5, Cell Temperature 25°C

NOCT (Nominal Operation Cell Temperature): Irradiance 800W/m², Ambient Temperature 20°C, Spectra at AM1.5, Wind at 1m/S

MECHANICAL CHARACTERISTICS

Cell Type	Monocrystalline 156.75mm x 156.75mm
Dimension (L× W × H)	Length: 1640mm (64.57 inch) Width: 992mm (39.06 inch) Height: 35mm (1.38 inch)
Weight	18.0kg (39.68 lbs)
Front Glass	3.2mm Toughened Glass
Frame	Anodized Aluminium Alloy
Cable	4mm² (IEC), Length:900mm or Customized Length
Junction Box	IP 68 Rated

TEMPERATURE RATINGS

Voltage Temperature Coefficient	-0.31%/°C
Current Temperature Coefficient	+0.05%/°C
Power Temperature Coefficient	-0.39%/°C
Tolerance	0~+5w
NOCT	45±2°C

ABSOLUTE MAXIMUM RATING

Operating Temperature	From -40 to +85°C
Hail Diameter @ 80km/h	Up to 25mm
Front Side Maximum Static Loading	5400Pa
Rear Side Maximum Static Loading	2400Pa
Maximum Series Fuse Rating	20A
PV Module Classification	II
Fire Rating (IEC 61730)	C
Module Fire Performance (UL 1703)	Type 1
Maximum System Voltage	DC 1000V/1500V

PACKING CONFIGURATION

Container	20' GP	40' HQ
Pieces/Container	312	896

ELECTRICAL CHARACTERISTICS

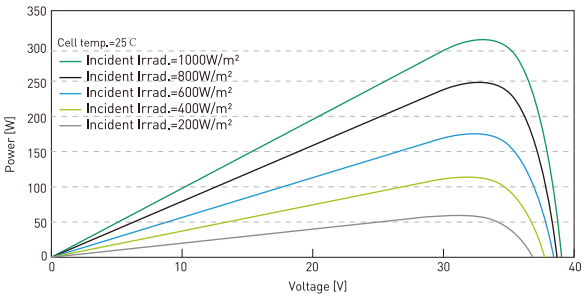

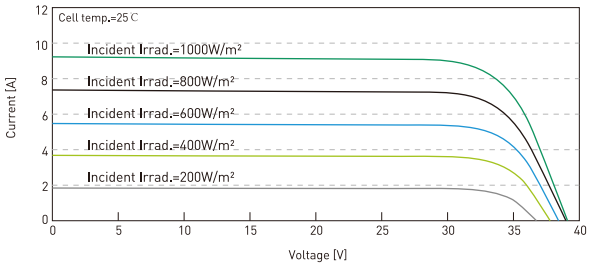

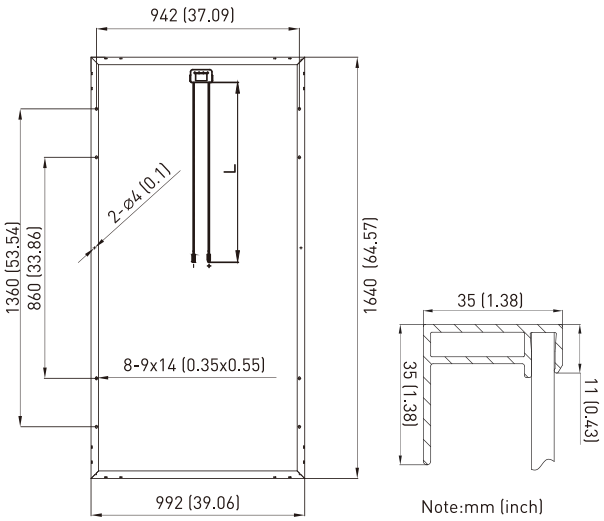

Phono® Solar

PHONO SOLAR TECHNOLOGY CO.,LTD reserves the right to make necessary adjustments to the information described herein at any time without further notice. The specifications and certificates contained in this datasheet may deviate slightly from our actual products due to the on-going innovation and product enhancement. Please be sure to use the most recent version of data.