TALESUN

HIPRO

TP660M **60-cell**

315 - 330W

mono perc

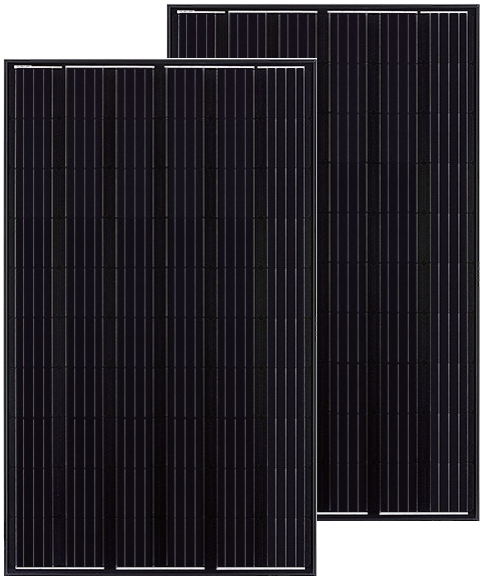

KEY FEATURES

Excellent Anti-PID performance

2 times of industry standard Anti-PID test by TUV SUD

IP68 junction box

High waterproof level

Lower temperature coefficients

Enhance power generation

SYSTEM & PRODUCT CERTIFICATES

- IEC 61215 / IEC 61730 / UL 1703
- ISO 9001: 2015 Quality Management System
- ISO 14001: 2015 Environment Management System
- ISO 45001: 2018 Occupational Health and Safety Management Systems

PERFORMANCE WARRANTY

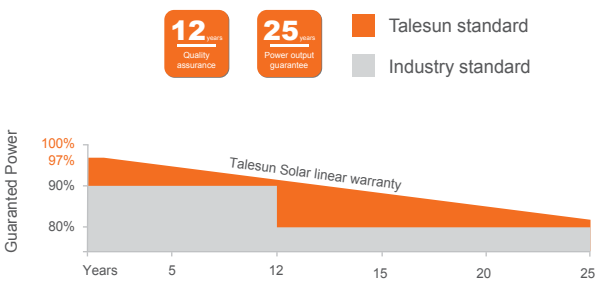

marketing.hq@talesun.com

Annual Module Capacity Globally: 8GW
China: 7GW
Thailand: 1GW

Talesun Solar is one of the world's largest integrated clean energy providers, who develops, manufactures and delivers highly reliable and cost-effective solar modules and integrated PV energy solutions for every application and market, for homes, businesses and utility power plants. It was ranked as one of the top 10 module suppliers in 2018, and was also listed as global TIER1 module supplier by BNEF since 2015.

ELECTRICAL PARAMETERS

Performance at STC (Power Tolerance 0 ~ +3%)

Maximum Power (Pmax/W)	315	320	325	330
Operating Voltage (Vmpp/W)	33.2	33.5	33.8	34.2
Operating Current (Impp/A)	9.49	9.56	9.62	9.66
Open-Circuit Voltage (Voc/V)	39.9	40.1	40.3	40.5
Short-Circuit Current (Isc/A)	10.09	10.16	10.22	10.26
Module Efficiency ηm(%)	18.9	19.2	19.5	19.8

Performance at NMOT

Maximum Power (Pmax/W)	234.7	238.3	241.8	245.6
Operating Voltage (Vmpp/W)	30.6	30.9	31.2	31.5
Operating Current (Impp/A)	7.66	7.71	7.76	7.80
Open-Circuit Voltage (Voc/V)	37.2	37.3	37.5	37.7
Short-Circuit Current (Isc/A)	8.14	8.20	8.25	8.28

STC: Irradiance 1000W/m², Cell Temperature 25°C, Air Mass AM1.5 NMOT: Irradiance at 800W/m², Ambient Temperatue 20°C, Air Mass AM1.5, Wind Speed 1m/s

MECHANICAL SPECIFICATION

Cell Type	Mono-Crystalline Silion (5Busbar)
Cell Dimensions	158.75*158.75mm (6inches)
Cell Arrangement	60 (6*10)
Weight	18.5kg (40.79lbs)
Module Dimensions	1665*1002*35mm (65.55*39.45*1.38inches)
Cable Length	900mm (35.43inches)
Cable Cross Section Size	4mm² (0.006inches²)
Front Glass	3.2mm High Transmission, Tempered Glass
No. of Bypass Diodes	3/6
Packing Configuration (1)	31pcs/carton, 868pcs/40hq
Packing Configuration (2)	31+4pcs/carton, 924pcs/40hq
Frame	Anodized Aluminium Alloy
Junction Box	IP68

I-V CURVE

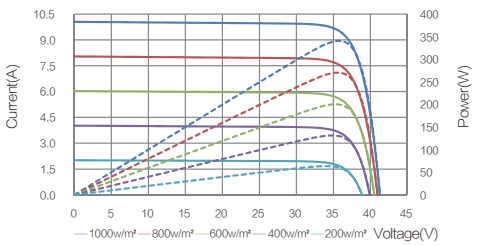

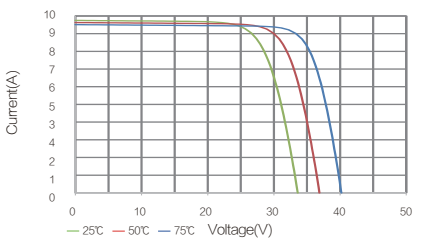

OPERATING CONDITIONS

Maximun System Voltage	1500V/DC
Operating Temperature	-40°C ~ +85°C
Maximun Series Fuse	20A
Static Loading	5400pa
Conductivity at Ground	≤0.1Ω
Safety Class	II
Resistance	≥100MΩ
Connector	MC4 Compatible

TEMPERATURE COEFFICIENT

Temperature Coefficient Pmax	-0.36%/°C
Temperature Coefficient Voc	-0.26%/°C
Temperature Coefficient Isc	+0.043%/°C
NMOT	43±2°C

TECHNICAL DRAWINGS

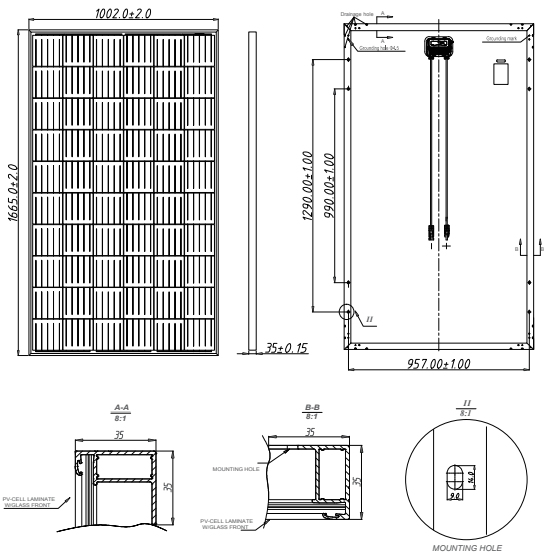

20200415EN The specification and key features described in this datasheet may deviate slightly and are not guaranteed. Due to ongoing innovation, R&D enhancement, Suzhou Talesun Solar Technologies Co., Ltd. reserves the right to make any adjustment to the information described herein at any time without notice. Please always obtain the most recent version of the datasheet which shall be duly incorporated into the binding contract made by the parties governing all transactions related to the purchase and sale of the products described herein.

TALESUN