Phono® Solar

Bifacial TwinPlus Module

Mono Perc/375-385W

Bloomberg NEW ENERGY FINANCE Tier1 2019 TOP PERFORMER PVEL DNV·GL PV MODULE RELIABILITY SCORECARD

PID Free

PID, based on the POE material and double glass design

Better Shading Tolerance

More Reliable

Lower hot spot temperature
Lower internal current

More Power

Low power loss in cell connection
Up to 30% more energy yield due to back side power generation

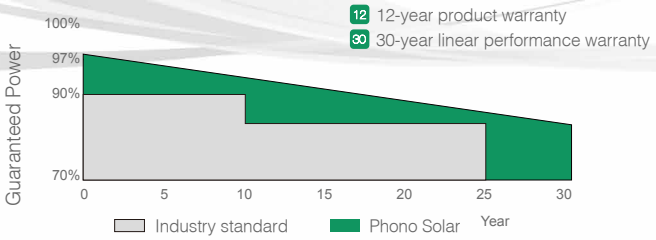



EN EN-20200206

SINOMACH SUMEC
SUMEC GROUP CORPORATION

MECHANICAL CHARACTERISTICS

		Rated Power (Pmpp)	Rated Current (Impp)	Rated Voltage (Vmpp)	Short Circuit Current (Isc)	Open Circuit Voltage (Voc)	Module Efficency
PS375MGF-24/TH PS375MGFH-24/TH		375	9.38	39.98	9.81	48.32	18.73%
Bifacial Gain	5%	393.75	9.85	39.98	10.30	48.32	19.67%
	10%	412.5	10.32	39.98	10.79	48.32	20.60%
	20%	450	11.26	39.98	11.78	48.32	22.48%
	30%	487.5	12.20	39.98	12.76	48.32	24.45%
PS380MGF-24/TH PS380MGFH-24/TH		380	9.43	40.30	9.89	48.56	18.98%
Bifacial Gain	5%	399	9.90	40.30	10.39	48.56	19.93%
	10%	418	10.37	40.30	10.88	48.56	20.88%
	20%	456	11.32	40.30	11.88	48.56	22.78%
	30%	494	12.26	40.30	12.86	48.56	24.68%
PS385MGF-24/TH PS385MGFH-24/TH		385	9.48	40.62	9.98	48.76	19.23%
Bifacial Gain	5%	404.25	9.95	40.62	10.48	48.76	20.19%
	10%	423.5	10.43	40.62	10.98	48.76	21.15%
	20%	462	11.37	40.62	11.97	48.76	23.08%
	30%	500.5	12.32	40.62	12.98	48.76	25.00%
Power Tolerance		0~+5w					
NOCT (Nominal Operation Cell Temperature)		43±2℃					
Voltage Temperature Coefficient		-0.30%/℃					
Current Temperature Coefficient		+0.05%/℃					
Power Temperature Coefficient		-0.38%/℃					

***** Bifacial Gain: The additional gain from the back side compared to the power of the front side at the standard test condition. It depends on mounting (structure, height, tilt angle etc.) and albedo of the ground.***

MECHANICAL CHARACTERISTICS

Dimension (L× W × H)	Length: 2006mm (78.98 inch) Width: 998mm (39.29 inch) Height: 30mm (1.18 inch)
Weight	26kg（57.32 lb）
Glass	2.0/2.0mm
Frame	Anodized Aluminiun Alloy
Cable	4mm² (IEC) , Length:350mm（vertical） 1250mm（horizontal）or Customized Length
Junction Box	IP 68 Rated

ABSOLUTE MAXIMUM RATING

Parameter	Values
Operating Temperature	From -40 to +85°C
Hail Diameter @ 80km/h	Up to 25mm
Surface Maximum Load Capacity	Up to 5400Pa
Maximum Series Fuse Rating	20A
PV Module Classification	Ⅱ
Fire Rating (IEC61730)	C
Maximum System Voltage	DC 1000V/1500V

PACKING CONFIGURATION

Container	20' GP	40' HQ
Pieces/Container	295	770

1. In compliance with our warranty terms and conditions.
2. Measurement conditions under irradiance level of Standard Test Conditions(STC): 1000W/m²
Air mass 1.5 spectrum, cell temperature of 25°C.

ELECTRICAL CHARACTERISTICS

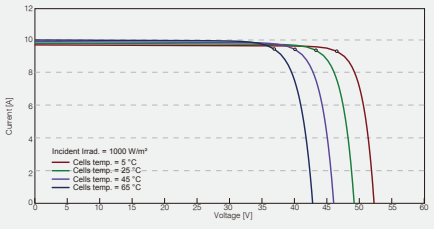

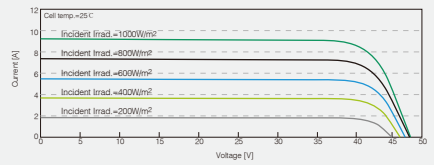

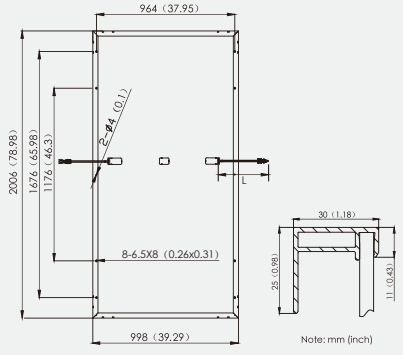

Phono® Solar

Note: This datasheet is not legally binding. Phono Solar Technology Co., Ltd. reserves the right to adjust specifications without notice. Further information please refer to our ***Website:www.phonosolar.com, E-mail:info@phonosolar.com***