Phono® Solar

Bifacial TwinPlus Module

Mono Perc/310-320W

PID Free

PID, based on the POE material and double glass design

Better Shading Tolerance

More Reliable

Lower hot spot temperature
Lower internal current

More Power

Low power loss in cell connection
Up to 30% more energy yield due to back side power generation

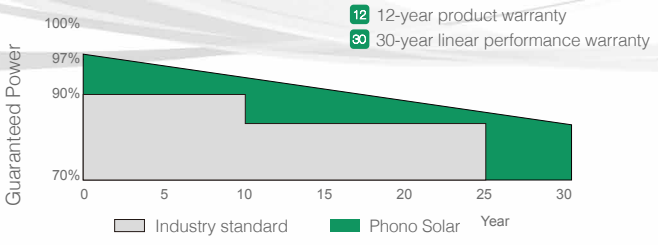

Bloomberg NEW ENERGY FINANCE Tier 1

2019 TOP PERFORMER PVEL DNV·GL PV MODULE RELIABILITY SCORECARD



EN EN-20200206

SINOMACH SUMEC
SUMEC GROUP CORPORATION

MECHANICAL CHARACTERISTICS

		Rated Power (Pmpp)	Rated Current (Impp)	Rated Voltage (Vmpp)	Short Circuit Current (Isc)	Open Circuit Voltage (Voc)	Module Efficency
PS310MGF-20/UH PS310MGFH-20/UH		310	9.28	33.41	9.58	40.90	18.45%
Bifacial Gain	5%	325.5	9.75	33.41	10.07	40.90	19.37%
	10%	341	10.21	33.41	10.54	40.90	20.29%
	20%	372	11.14	33.41	11.50	40.90	22.13%
	30%	403	12.07	33.41	12.46	40.90	23.98%
PS315MGF-20/UH PS315MGFH-20/UH		315	9.32	33.80	9.64	41.30	18.74%
Bifacial Gain	5%	330.75	9.79	33.80	10.13	41.30	19.68%
	10%	346.5	10.25	33.80	10.61	41.30	20.62%
	20%	378	11.19	33.80	11.58	41.30	22.49%
	30%	409.5	12.12	33.80	12.54	41.30	24.37%
PS320MGF-20/UH PS320MGFH-20/UH		320	9.36	34.19	9.71	41.65	19.04%
Bifacial Gain	5%	336	9.83	34.19	10.20	41.65	19.99%
	10%	352	10.30	34.19	10.69	41.65	20.94%
	20%	384	11.23	34.19	11.65	41.65	22.85%
	30%	416	12.17	34.19	12.63	41.65	24.75%
Power Tolerance				0~+5w			
NOCT (Nominal Operation Cell Temperature)				43±2℃			
Voltage Temperature Coefficient				-0.30%/℃			
Current Temperature Coefficient				+0.05%/℃			
Power Temperature Coefficient				-0.38%/℃			

***** Bifacial Gain: The additional gain from the back side compared to the power of the front side at the standard test condition. It depends on mounting (structure, height, tilt angle etc.) and albedo of the ground.***

MECHANICAL CHARACTERISTICS

Dimension (L× W × H)	Length: 1684mm (66.30 inch) Width: 998mm (39.29 inch) Height: 30mm (1.18 inch)
Weight	23kg（50.71 lb）
Glass	2.0/2.0mm
Frame	Anodized Aluminium Alloy
Cable	4.0mm² (IEC), Length:350mm（vertical） 1150mm（horizontal）or Customized Length
Junction Box	IP 68 Rated

ABSOLUTE MAXIMUM RATING

Parameter	Values
Operating Temperature	From -40 to +85°C
Hail Diameter @ 80km/h	Up to 25mm
Surface Maximum Load Capacity	Up to 5400Pa
Maximum Series Fuse Rating	20A
PV Module Classification	Ⅱ
Fire Rating (IEC61730)	C
Maximum System Voltage	DC 1000V/1500V

PACKING CONFIGURATION

Container	20' GP	40' HQ
Pieces/Container	330	910

1. In compliance with our warranty terms and conditions.
2. Measurement conditions under irradiance level of Standard Test Conditions(STC): 1000W/m²
Air mass 1.5 spectrum, cell temperature of 25°C.

ELECTRICAL CHARACTERISTICS

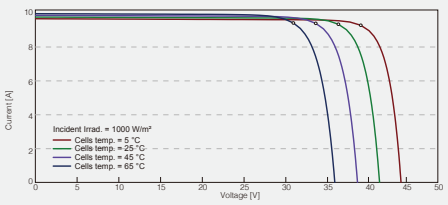

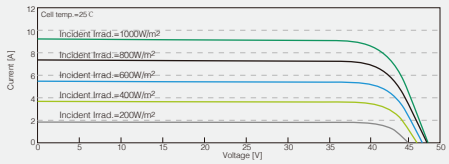

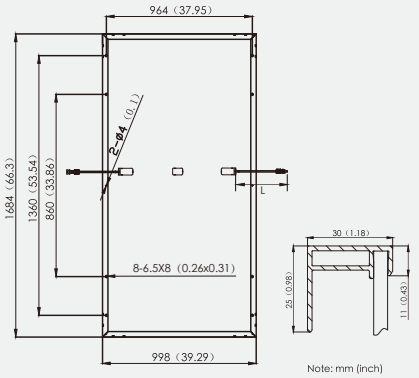

Note: This datasheet is not legally binding. Phono Solar Technology Co., Ltd. reserves the right to adjust specifications without notice. Further information please refer to our ***Website:www.phonosolar.com, E-mail:info@phonosolar.com***

Phono® Solar